Component Location (2WS)

Index

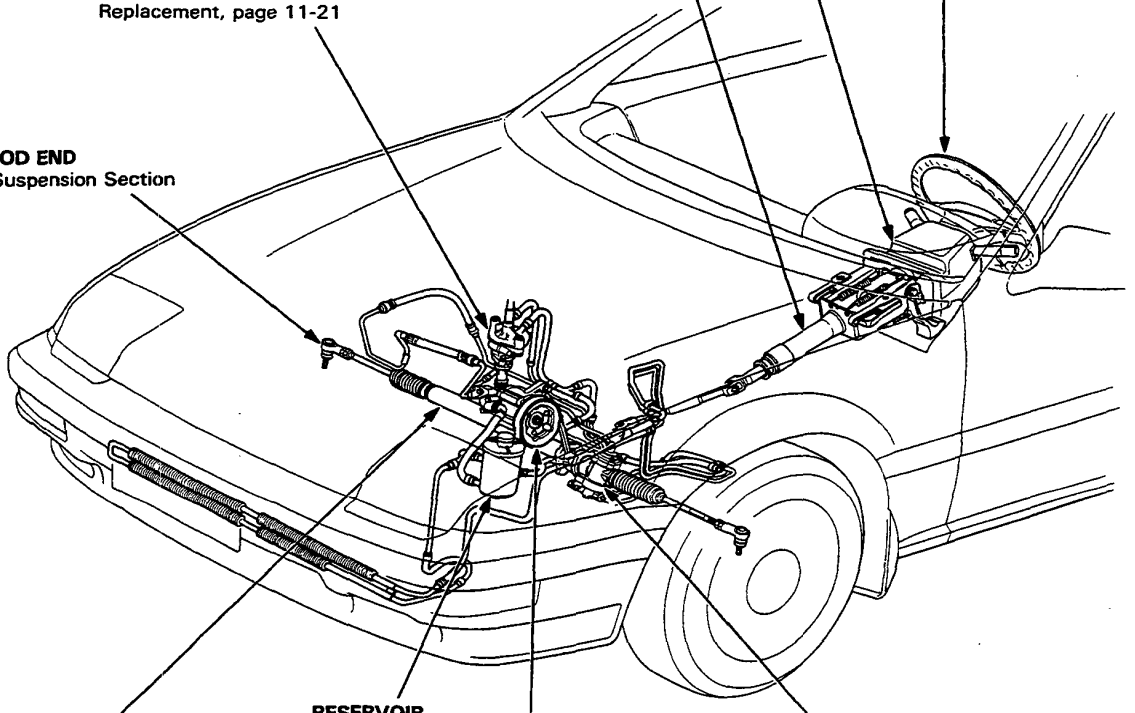

IGNITION SWITCH
Steering Lock Replacement, page 11-25
Switch Test, see Electrical Section

STEERING WHEEL
Steering wheel positioning, see Suspension/Alignment
Disassembly/Reassembly, page 11-23

COLUMN
Removal/Installation, page 11-24

SPEED SENSOR
Replacement, page 11-21

TIE-ROD END
See Suspension Section

RESERVOIR

STEERING GEARBOX
Rack Guide Adjustment, page 11-18
Index, page 11-34
Removal, page 11-42
Overhaul, page 11-45
Installation, page 11-80

VALVE BODY UNIT
Removal, page 17-36
Overhaul, page 17-36
Installation page 17-41

PUMP
Pump Belt Adjustment, page 11-18
Fluid Replacement, page 11-19
Pump Pressure Check, page 11-19
Inspection, page 11-26
Pump Replacement, page 11-27
Control Valve Inspection and Replacement, page 11-28
Housing Disassembly, page 11-31
Housing Reassembly, page 11-32